In-Wall Cage

Electrical Knockouts of Wall Cage

Remove appropriate electrical conduit knockouts prior to installation of the cage.

• AFLIWC-408A/B-R10

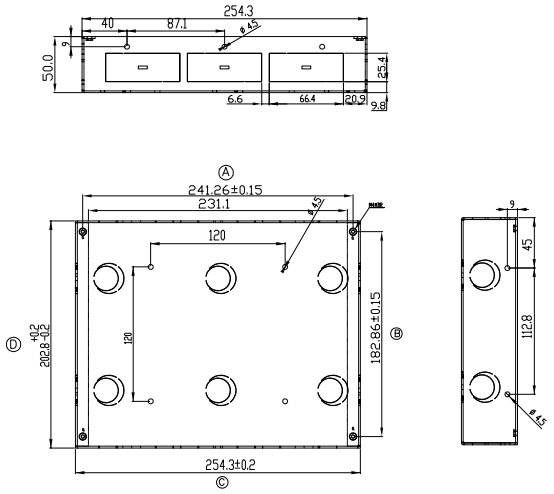

• AFLIWC-W410A-R10

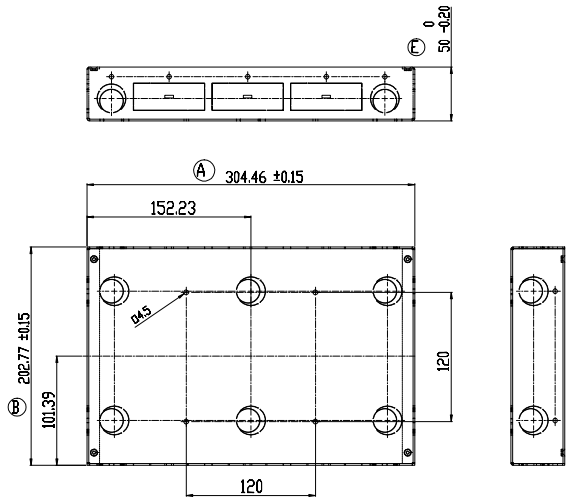

• AFLIWC-412A-R10

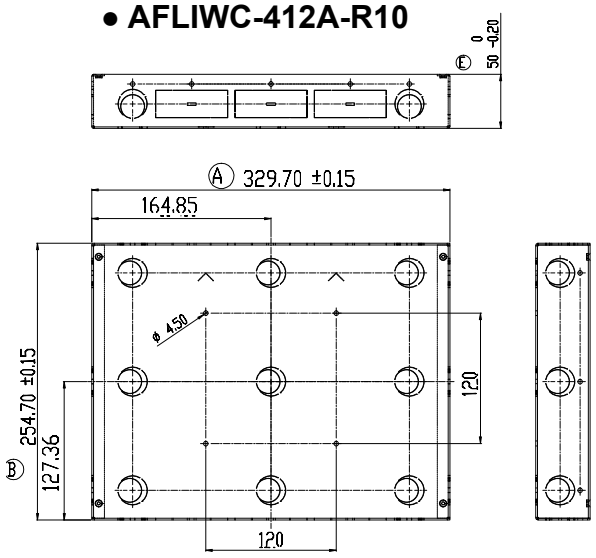
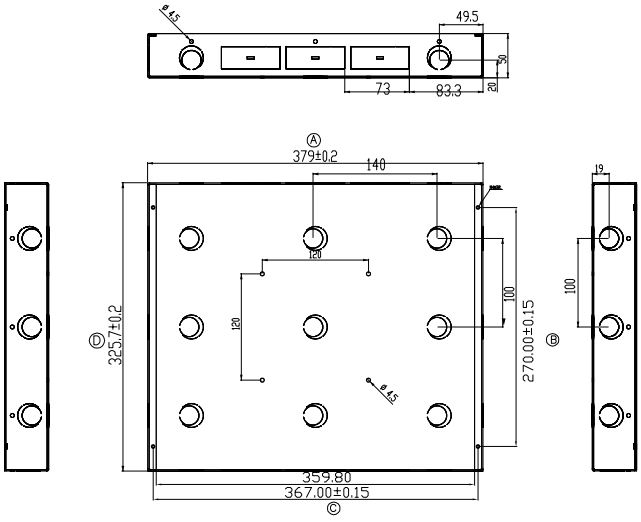
• AFLIWC-415A-R10